Remove batteries to turn off or install a switch.

Use jumper J1 to run test program after programming the PIC.

You may need to change the value of R4 if a different optocoupler is used instead of the one that is listed.

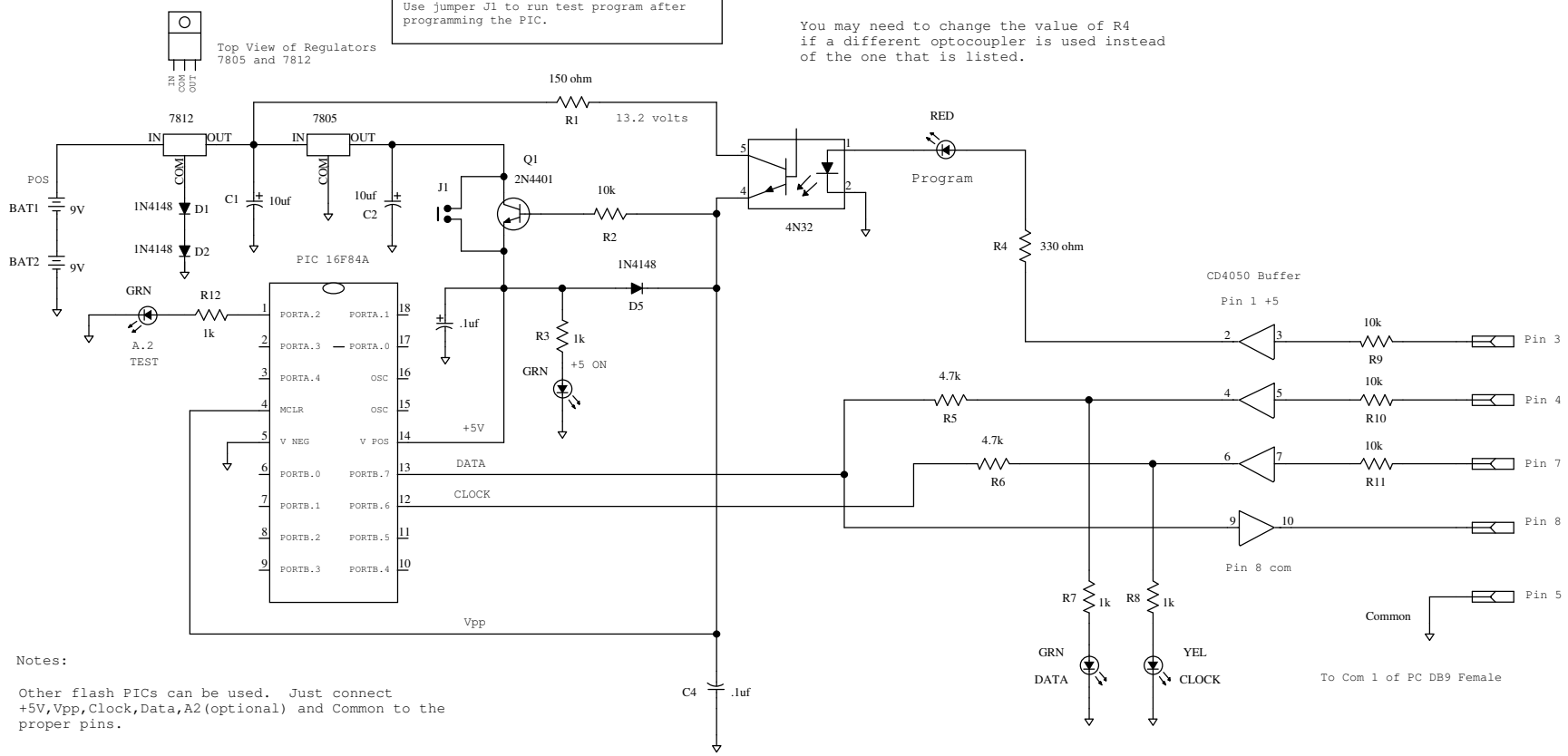

Notes:

Other flash PICs can be used. Just connect +5V,Vpp,Clock,Data,A2(optional) and Common to the proper pins.

Gang together 40,28,18,14 pin sockets for the PIC. 12F series will fit in the 14 pin socket. Align pin 1

Dual leaf contacts instead of machine pin sockets are easier to use for inserting and removal of the pic.

Q1 can be a 2N3904 general purpose NPN transistor.

Test Mode: If a test program that flashes port A.2 is loaded in the PIC, a jumper at J1 will run the PIC in normal mode and flash the led.

Use IC-PROG'S "check hardware" feature to test operation after constuction and before programming a PIC.

Opto-Pic-Programmer

Buffered input to work with laptops. Uses an optocoupler for level conversion of the programming voltage. Use with IC-PROG set for JDM.

Design by Bill Sherman

Update Nov. 6, 2004