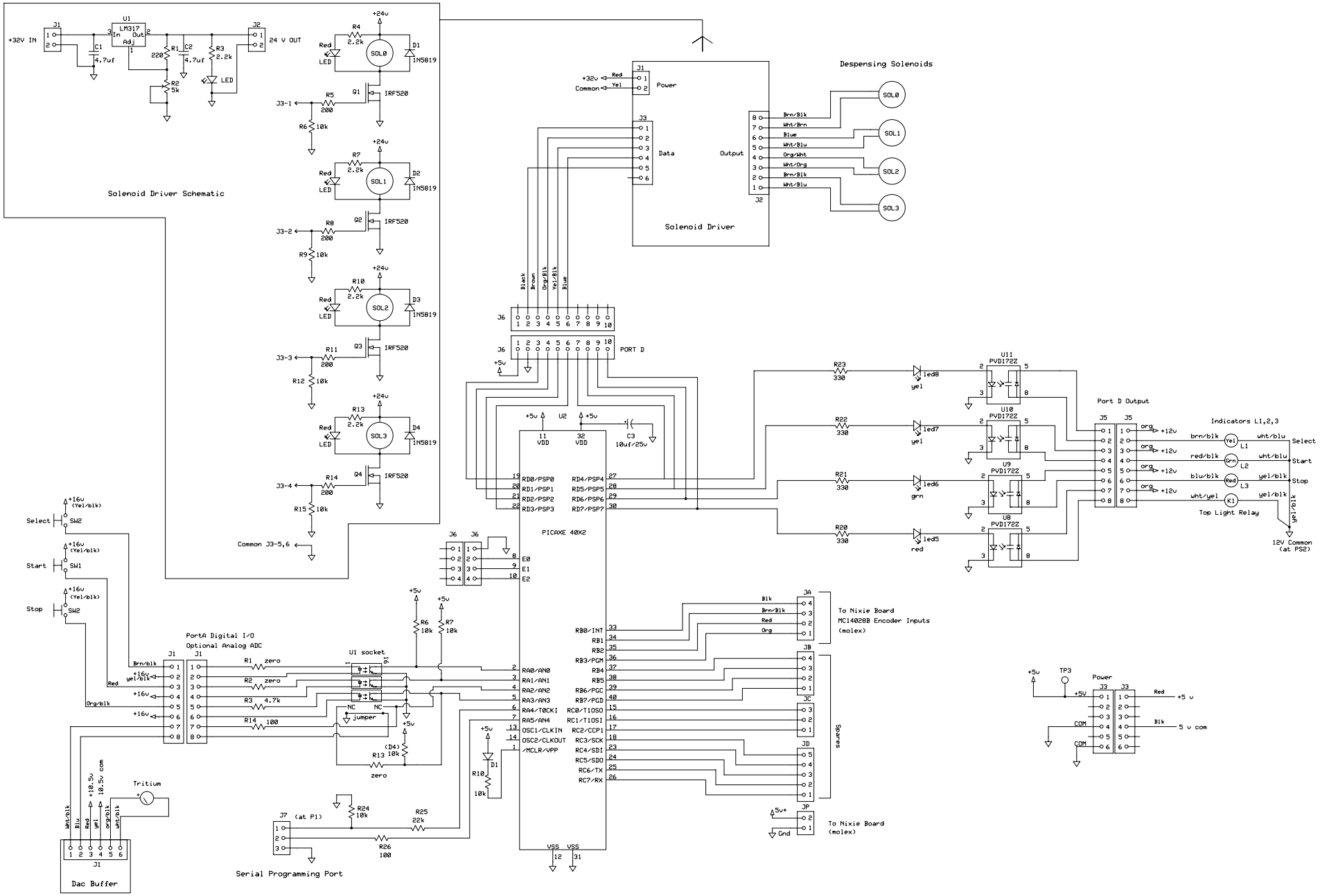

Botronics		
Barbot Controller		
W.D Sherman	Rev 1.0	
	12/25/2011	